U.S. CABINET DEPOT

# RANGE HOODS

## Wilmington

ANGLED

CLASSIC MOULDING SMOOTH
V1

STRAP MOULDING
V2

SOLID WOOD BAND
V3

**PHONE**: 844-660-9889 - **FAX**: 770-767-3806 - **WEBSITE**: WWW.USCABINETDEPOT.COM - **EMAIL**: INFO@USCABINETDEPOT.COM

# HIGHLAND COLLECTION

## FEATURES

- Angled Chimney (Trimmable by 6")
- Moulding on Base (Varies by Style)
- Plywood/Maple Construction
- Available unfinished (raw) or finished in any one of the Highland Series' paints/stains.
- Two-Piece construction for easy mounting & access to fan and ducting.

## AVAILABLE SIZES

| 30" WIDE | 36" WIDE | 42" WIDE | 48" WIDE |
|---|---|---|---|
| 30"W X 36"H | 36"W X 36"H | 42"W X 36"H | 48"W X 36"H |
| 30"W X 48"H | 36"W X 48"H | 42"W X 48"H | 48"W X 48"H |

**Range hood styles with straps have a varying number of straps dependent on hood width.**

- 30" - One Strap
- 36" - Two Straps
- 42" - Two Straps
- 48" - Three Straps

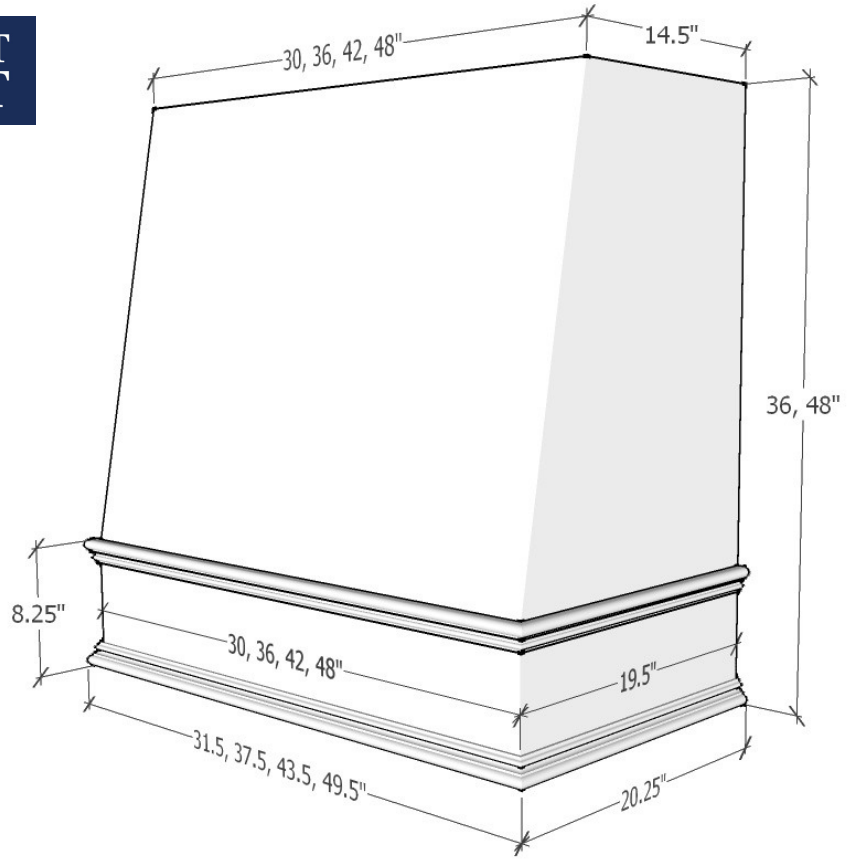


**PHONE**: 844-660-9889 - **FAX**: 770-767-3806 - **WEBSITE**: WWW.USCABINETDEPOT.COM - **EMAIL**: INFO@USCABINETDEPOT.COM